WILLIAM E. SIMONTON III
CLIMAX CN # 1551
LIMA DIAMOND STACK
May 2013

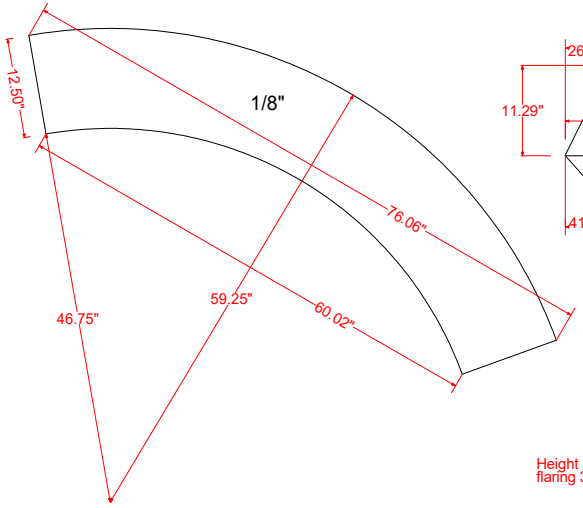

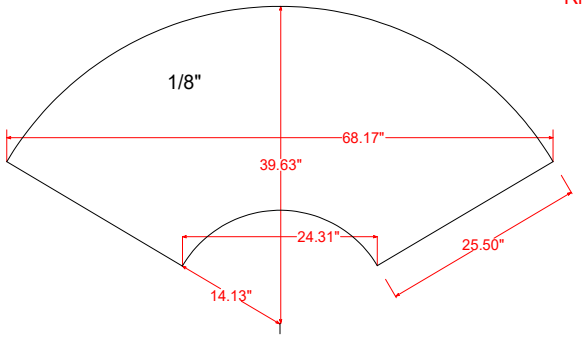

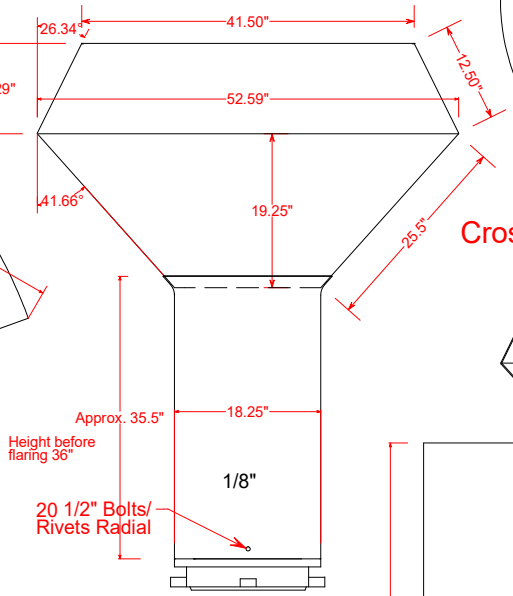

Top View

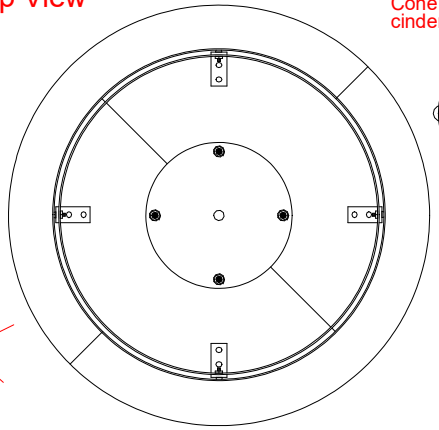

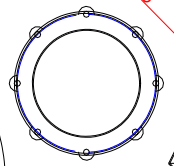

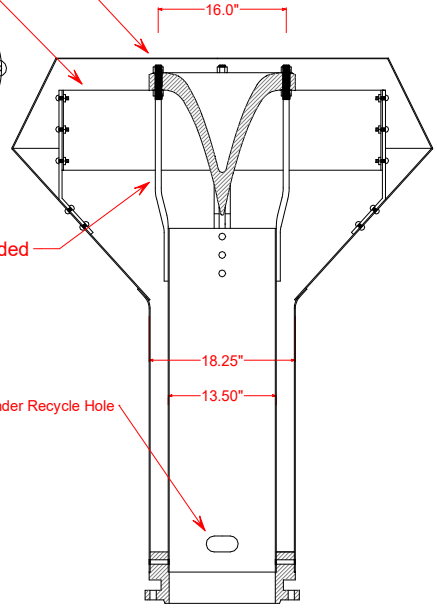

Cross Sections